9 cable system
Radial multiswitches

- star distribution system of 8 SAT IF polarities and terrestrial TV signal up to 16 users
- built-in power supply for remote DC feeding
- possibility to feed DC for preamplifier through terrestrial TV input
- passive terrestrial TV path
- die-cast housing

MRS904
9x4 multiswitch

MRS908
9x8 multiswitch

MRS912
9x12 multiswitch

MRS916
9x16 multiswitch

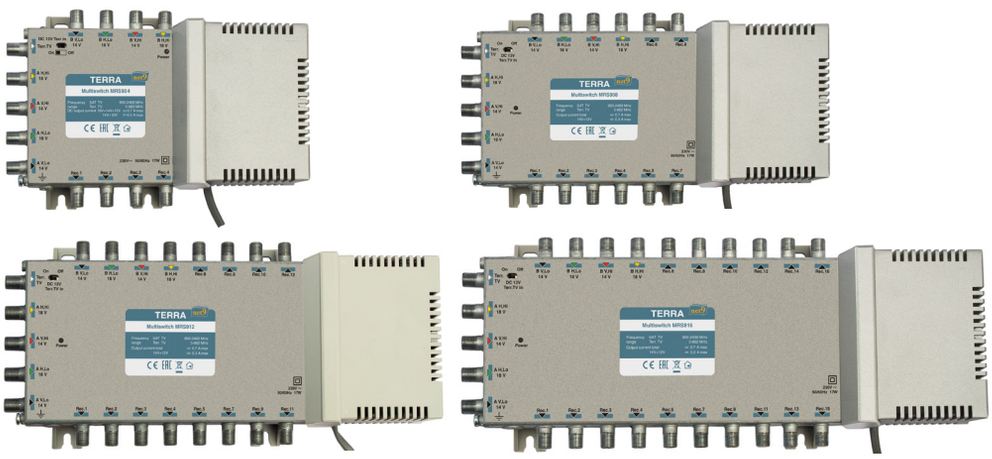

Technical specifications

TYPE		MRS904	MRS908	MRS912	MRS916
Ordering number		02755	02756	02757	02758
Number of outputs		4	8	12	16
Frequency range	SAT IF	950-2400 MHz			
	Terr. TV	5-862 MHz			
Typical loss	SAT	8-4 dB		9-6 dB	10-8 dB
	Terr. TV	10 dB	14 dB	17 dB	18 dB
Output level for SAT IF (IMD3=35 dB)		100 dBμV			
SAT inputs decoupling		> 30 dB			
Outputs decoupling		> 30 dB			
Rejection	Terr. TV/SAT	≥ 24 dB			
	SAT/Terr. TV	≥ 45 dB			
Supply voltage through RF inputs		H,Lo and H/Hi - 18 V; V,Lo and V/Hi - 14 V; Terr. TV - 12 V			
DC supply current through RF inputs	+18V &+14V &+12V	≤ 0.7 A			
	+14V &+12V	≤ 0.3 A			
	+12V	≤ 0.1 A			
Current consumption from receiver		< 70 mA			
Control signals		14/18 V, 0/22 kHz, tone burst or DiSEqC 2.0			
Power consumption with maximal loud		230 V~ 50/60 Hz 17 W			
Operating temperature range		-20° ÷ + 50° C			
Dimensions/Weight (packed)		200x135x52 mm/0.68 kg	252x135x52 mm/0.86 kg	292x135x52 mm/1 kg	332x135x52 mm/1.14 kg

9 cable system

Radial multiswitches

- star distribution system of 8 SAT IF polarities and terrestrial TV signal up to 16 users
- integrated LTE signal suppression filter
- built-in power supply with possibility of remote DC feeding for LNBs and preamplifier through terrestrial TV input
- gain regulators for every SAT IF input and separate 1 dB step regulator for terrestrial TV
- passive and active Terr.TV path
- die-cast housing

MR908L
9x8 multiswitch

MR912L
9x12 multiswitch

MR916L
9x16 multiswitch

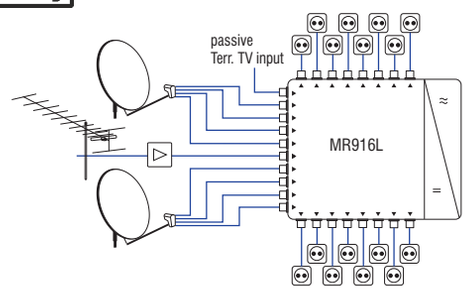

Technical specifications

TYPE			MR908L	MR912L	MR916L
Ordering number			02771	02772	02773
Number of outputs			8	12	16
Frequency range	SAT IF		950-2400 MHz		
	Terr. TV		active 47-790 MHz; passive 5-862 MHz		
Gain (fixed slope pre-correction)	SAT IF	outputs 1-4	9 ÷ 14 dB		
		outputs 5-8	8 ÷ 12 dB		
		outputs 9-10	-	7 ÷ 10 dB	
		outputs 11-12	-	6 ÷ 8 dB	7 ÷ 10 dB
		outputs 13-16	-		6 ÷ 8 dB
	Terr. TV active	outputs 1-4	1 ÷ 5 dB		
		outputs 5-8	0.5 ÷ 4 dB		
		outputs 9-10	-	0 ÷ 3 dB	
		outputs 11-12	-	-1 ÷ 2 dB	0 ÷ 3 dB
		outputs 13-16	-		-1 ÷ 2 dB
Loss	Terr.TV passive	outputs 1-8	28 dB		
		outputs 9-16	-	30 dB	
Gain adjustment	SAT IF		12 dB by 4 dB step		
	Terr. TV active		15 dB by 1 dB step		
Output level for SAT IF (IMD3=35 dB)*			93 dBμV		
Output level for Terr. TV (IMD3=60 dB)*		outputs 1-8	85 dBμV		
		outputs 9-12	-	83 dBμV	
		outputs 13-16	-		82 dBμV
SAT inputs decoupling			> 30 dB		
Outputs decoupling			> 30 dB		
Supply voltage through RF inputs			H,Lo and H,Hi - 18 V; V,Lo and V,Hi - 14 V; Terr. TV - 12 V		
DC supply current through RF inputs	+18V &+14V &+12V		< 1 A		
	+14V & +12V		< 0.5 A		
	+12V		< 0.1 A		
Current consumption from receiver			< 60 mA		
Control signals			14/18 V, 0/22 kHz, tone burst or DiSEqC 2.0		
Power consumption**			230 V~ 50/60 Hz 4 W		
Operating temperature range			-20° ÷ + 50° C		
Dimensions/Weight (packed)			253x135x52 mm/1.44 kg		

* 2 equal carriers; output level by DIN45004B - add 3 dB to mentioned above value

** without external DC load; with maximal load 25 W

9 cable system
Radial multiswitches

- star distribution system of 8 SAT IF polarities and terrestrial TV signal up to 32 users
- integrated LTE signal suppression filter
- built-in power supply with possibility of remote DC feeding for LNBs and preamplifier through terrestrial TV input
- gain regulators for every SAT IF input and separate 1 dB step regulator for terrestrial TV
- passive and active Terr.TV path
- die-cast housing

MR924L
9x24 multiswitch

MR932L
9x32 multiswitch

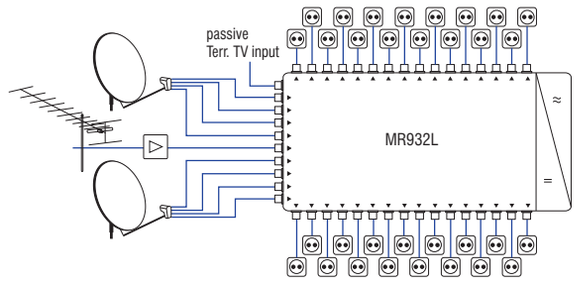

Technical specifications

TYPE			MR924L	MR932L
Ordering number			02774	02775
Number of outputs			24	32
Frequency range	SAT IF		950-2400 MHz	
	Terr. TV		active 47-790 MHz; passive 5-862 MHz	
Gain (fixed slope pre-correction)	SAT IF	outputs 1-8	7 ÷ 12 dB	
		outputs 9-16	6 ÷ 10 dB	
		outputs 17-24	5 ÷ 8 dB	
		outputs 25-32	-	4 ÷ 6 dB
	Terr. TV active	outputs 1-8	1 ÷ 4 dB	
		outputs 9-16	0 ÷ 2 dB	
		outputs 17-24	-1 ÷ 0 dB	
		outputs 25-32	-	-2 ÷ -2 dB
Loss	Terr. TV passive	outputs 1-8	29 dB	
		outputs 9-16	31 dB	
		outputs 17-24	33 dB	
		outputs 25-32	-	35 dB
Gain adjustment	SAT IF		12 dB by 4 dB step	
	Terr. TV active		15 dB by 1 dB step	
Output level for SAT IF (IMD3=35 dB)*			93 dBμV	
Output level for Terr. TV (IMD3=60 dB)*		outputs 1-8	85 dBμV	
		outputs 9-16	83 dBμV	
		outputs 17-24	81 dBμV	
		outputs 25-32	-	79 dBμV
SAT inputs decoupling			> 30 dB	
Outputs decoupling			> 30 dB	
Supply voltage through RF inputs			H,Lo and H,Hi - 18 V; V,Lo and V,Hi - 14 V; Terr. TV - 12 V	
DC supply current through RF inputs	+18V &+14V &+12V		< 1 A	
	+14V & +12V		< 0.5 A	
	+12V		< 0.1 A	
Current consumption from receiver			< 60 mA	
Control signals			14/18 V, 0/22 kHz, tone burst or DiSEqC 1.0, DiSEqC 2.0 or compatible versions	
Power consumption**			230 V~ 50/60 Hz 4 W	
Operating temperature range			-20° ÷ + 50° C	
Dimensions/Weight (packed)			293x135x52 mm/1.75 kg	333x135x52 mm/2.15 kg

* 2 equal carriers; output level by DIN45004B - add 3 dB to mentioned above value

** without external DC load; with maximal load 25 W

9 cable system

Remotely powered multiswitches

- for large installations of SAT IF distribution systems
- integrated LTE signal suppression filter
- in line powering through H lines
- length of the subscriber line up to 80 meters
- gain regulators for every SAT IF input and separate 1 dB step regulator for terrestrial TV
- active terrestrial TV path and SAT IF input amplifiers are powered from central power supply
- LED indication of 18 V line powering
- possibility of supply powering for LNBs equipment from external +18 V power supply unit: recommended power supply - PS182F
- die-cast housing

MV908L
9x8 multiswitch
MV912L
9x12 multiswitch
MV916L
9x16 multiswitch

Technical specifications

TYPE			MV908L	MV912L	MV916L
Ordering number			02766	02767	02768
Number of outputs			8	12	16
Frequency range	SAT IF		950-2400 MHz		
	Terr. TV		47-790 MHz		
Gain (fixed slope pre-correction)	SAT IF	outputs 1-4	9 ÷ 14 dB		
		outputs 5-8	8 ÷ 12 dB		
		outputs 9-10	-	7 ÷ 10 dB	
		outputs 11-12	-	6 ÷ 8 dB	7 ÷ 10 dB
		outputs 13-16	-		6 ÷ 8 dB
	Terr. TV	outputs 1-4	4 ÷ 9 dB		
		outputs 5-8	3.5 ÷ 8 dB		
		outputs 9-10	-	3 ÷ 7 dB	
		outputs 11-12	-	2.5 ÷ 6 dB	3 ÷ 7 dB
		outputs 13-16	-		2.5 ÷ 6 dB
Gain adjustment	SAT IF		12 dB by 4 dB step		
	Terr. TV		15 dB by 1 dB step		
Output level for SAT IF (IMD3=35 dB)*			93 dBμV		
Output level for Terr. TV (IMD3=60 dB)*		outputs 1-8	88 dBμV		
		outputs 9-12	-	86 dBμV	
		outputs 13-16	-		86 dBμV
SAT inputs decoupling			> 30 dB		
Outputs decoupling			> 30 dB		
Current consumption from receiver			< 60 mA		
Current consumption from inputs H lines or from external power supply			12 V ÷ 18 V < 160 mA at 18 V		
DC pass through connector "AUX 18 V"			18 V 1 A max.		
Control signals			14/18 V, 0/22 kHz, tone burst or DiSEqC 1.0, DiSEqC 2.0 or compatible versions		
Operating temperature range			-20° ÷ + 50° C		
Dimensions			187x135x52 mm		
Weight (packed)			1.26 kg		

* 2 equal carriers; output level by DIN45004B - add 3 dB to mentioned above value

9 cable system

Remotely powered multiswitches

- for large installations of SAT IF distribution systems
- integrated LTE signal suppression filter
- in line powering through H lines
- length of the subscriber line up to 80 meters
- gain regulators for every SAT IF input and separate 1 dB step regulator for terrestrial TV
- active terrestrial TV path and SAT IF input amplifiers are powered from central power supply
- LED indication of 18 V line powering
- possibility of supply powering for LNBs equipment from external +18 V power supply unit: recommended power supply - PS182F
- die-cast housing

MV924L
9x24 multiswitch

MV932L
9x32 multiswitch

Technical specifications

TYPE			MV924L	MV932L
Ordering number			02769	02770
Number of outputs			24	32
Frequency range	SAT IF		950-2400 MHz	
	Terr. TV		47-790 MHz	
Gain (fixed slope pre-correction)	SAT IF	outputs 1-8	7 ÷ 12 dB	
		outputs 9-16	6 ÷ 10 dB	
		outputs 17-24	5 ÷ 8 dB	
		outputs 25-32	-	4 ÷ 6 dB
	Terr. TV	outputs 1-8	4 ÷ 9 dB	
		outputs 9-16	3 ÷ 7 dB	
		outputs 17-24	2 ÷ 5 dB	
		outputs 25-32	-	1 ÷ 3 dB
Gain adjustment	SAT IF		12 dB by 4 dB step	
	Terr. TV		15 dB by 1 dB step	
Output level for SAT IF (IMD3=35 dB)*			93 dBμV	
Output level for Terr. TV (IMD3=60 dB)*		outputs 1-8	88 dBμV	
		outputs 9-16	86 dBμV	
		outputs 17-24	84 dBμV	
		outputs 25-32	-	82 dBμV
SAT inputs decoupling			> 30 dB	
Outputs decoupling			> 30 dB	
Current consumption from receiver			< 60 mA	
Current consumption from inputs H lines or from external power supply			12 V ÷ 18 V < 160 mA at 18 V	
DC pass through connector "AUX 18 V"			18 V 1 A max.	
Control signals			14/18 V, 0/22 kHz, tone burst or DiSEqC 1.0, DiSEqC 2.0 or compatible versions	
Operating temperature range			-20° ÷ + 50° C	
Dimensions/Weight (packed)			227x135x52 mm/1.42 kg	267x135x52 mm/1.86 kg

* 2 equal carriers; output level by DIN45004B - add 3 dB to mentioned above value

9 cable system

Taps and splitter

- 2 way splitter and one way taps of 8 SAT+1 terrestrial signals
- low losses
- switchable DC pass to tap H outputs
- accepts central pin ∅ 1.2 mm max.
- die-cast housing

SD904
2 way splitter

SD910
1 way 10 dB tap

SD915
1 way 15 dB tap

SD920
1 way 20 dB tap

Technical specifications

TYPE		SD904	SD910	SD915	SD920
Ordering number		02776	02777	02778	02779
Frequency range	SAT IF	950-2400 MHz			
	Terr. TV	5-862 MHz			
Through loss	SAT IF	4 dB	1.5 dB	1.1 dB	0.8 dB
	Terr. TV	4 dB	1.8 dB	1.3 dB	1.1 dB
Tap loss	SAT IF	4 dB	12 ÷ 8 dB	17 ÷ 13 dB	22 ÷ 18 dB
	Terr. TV	4 dB	10 dB	15 dB ÷ 16 dB	20 dB
SAT inputs decoupling	SAT IF	30 dB			
	Terr. TV	30 dB			
DC pass through	V lines	0.5 A max.			
	H lines	4 A max. (1 A max. through one line)			
	Terr.TV lines	0.1 A max.			
Return loss		> 10 dB			
Operating temperature range		-20° ÷ + 50° C			
Dimensions/Weight (packed)		126x135x52 mm/0.82 kg			

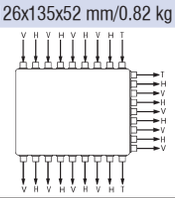

4 way splitter

- 4 way splitter of 8 SAT+1 terrestrial TV signals
- switchable DC pass to tap H outputs
- accepts central pin ∅ 1.2 mm max.
- die-cast housing

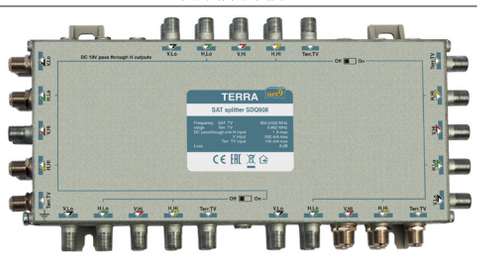

Technical specifications

TYPE		SDQ908
Ordering number		02780
Frequency range	SAT IF	950-2400 MHz
	Terr. TV	5-862 MHz
Through loss	SAT IF	8 dB
	Terr. TV	8 dB
SAT inputs decoupling	SAT IF	30 dB
	Terr. TV	30 dB
DC pass through	V lines	0.5 A max.
	H lines	4 A max. (1 A max. through one line)
	Terr.TV lines	0.1 A max.
Operating temperature range		-20° ÷ + 50° C
Dimensions/Weight (packed)		267x135x52 mm/1.4 kg

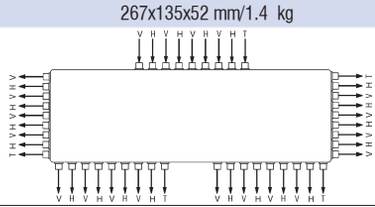

9 cable system

Launch and line amplifiers

- for compensation of through losses of multiswitches and interconnection cables in 9 cable distribution systems
- integrated LTE signal suppression filter
- signal level control and adjustable equalizer at all inputs
- push-pull amplifier on terrestrial TV line
- die-cast housing

SA91L
launch amplifier for amplifying of 8 SAT IF and terrestrial TV signals; built-in switch-mode power supply allows to feed: 18 V DC via H inputs and 14 V DC via V inputs to up lines; switchable 18 V DC via H outputs and switchable 14 V DC via V outputs to down lines;
switchable 12 V DC via Terr. TV input

SA91DL
line amplifier for amplifying of 8 SAT IF and terrestrial TV signals; in line powering through H lines; switchable DC pass through H and V lines;
switchable 12 V feeding via Terr. TV input;
remote powering voltage indication

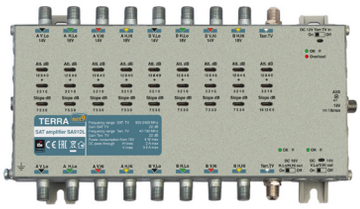

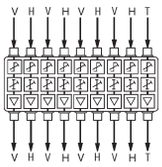

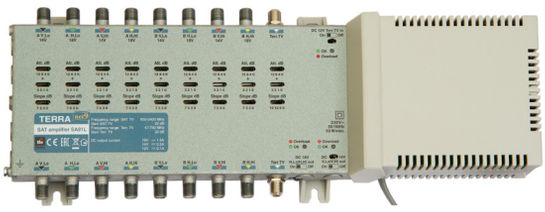

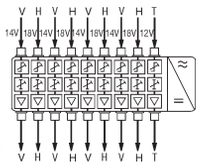

Technical specifications

TYPE		SA91L	SA91DL
Ordering number		02781	02782
Frequency range	SAT IF	950-2400 MHz	
	Terr. TV	47-790 MHz	
Gain	SAT IF, adjustable	22 dB (0 ÷ -15 dB) by 1 dB step	
	Terr. TV, adjustable	22 dB (0 ÷ -15 dB) by 1 dB step	
Slope	SAT IF, switchable	0/3/5/7 dB	
	Terr. TV, switchable	0/6/12/18 dB	
Isolation	SAT/SAT	30 dB	
	SAT/Terr. TV	30 dB	
Noise figure, typical		≤ 9 dB	
Output level IMD3=60 dB Terr. TV****		109 dBμV	
Output level IMD3=35 dB SAT IF****		114 dBμV	
External equipment powering	through V lines	14 V 0.5 A max. (switchable)	-
	through H lines	18 V 1.8 A* max. (switchable)	-
	through Terr line	12 V 0.1 A max. (switchable)	-
DC pass through, switchable through H lines		2 A* max.	
Power consumption		230 V~ 50/60 Hz 7 W**	DC 9-18 V 5 W***
Operating temperature range		-20° ÷ + 50° C	
Dimensions/Weight (packed)		335x135x52 mm/1.18 kg	255x135x32 mm/0.9 kg

* 1 A max. through one line
** without external DC loading; with maximal external DC load - 55 W
*** in line powering of SA91DL through H lines
**** measured using 2 equal signals; output level by DIN45004B - add 3 dB to mentioned above value

9 cable system

Application diagrams

Floor by floor installation powered from SA91L.

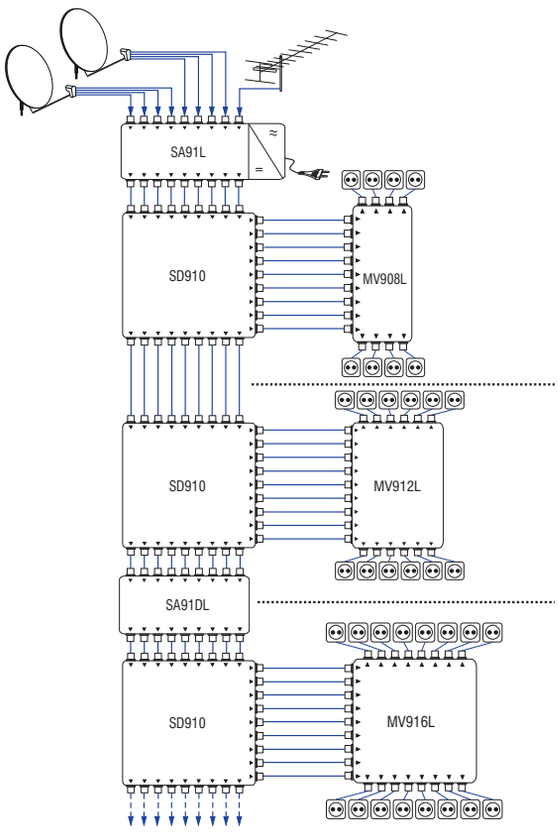

Floor by floor installation powered from external power supply on ground level.

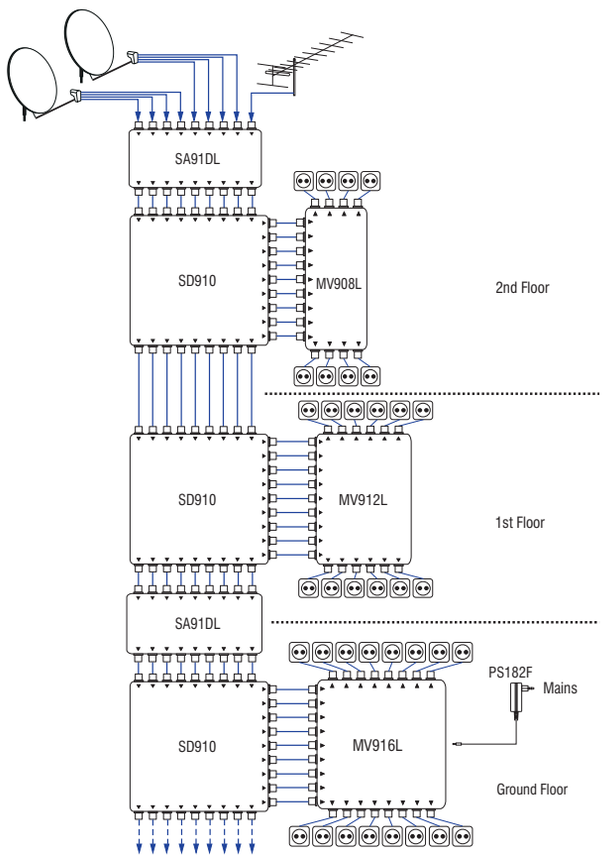

MV908L - 9x8 multiswitch, **page 20**
MV912L - 9x12 multiswitch, **page 20**
MV916L - 9x16 multiswitch, **page 20**
PS182F - power supply, **www.terraelectronics.com**
SA91L - launch amplifier, **page 23**
SA91DL - line amplifier, **page 23**
SD910 - 1 way 10 dB tap, **page 22**

9 cable system
Application diagrams

Four entrances house, 2 floors house installation. Whole system powered from SA91L.

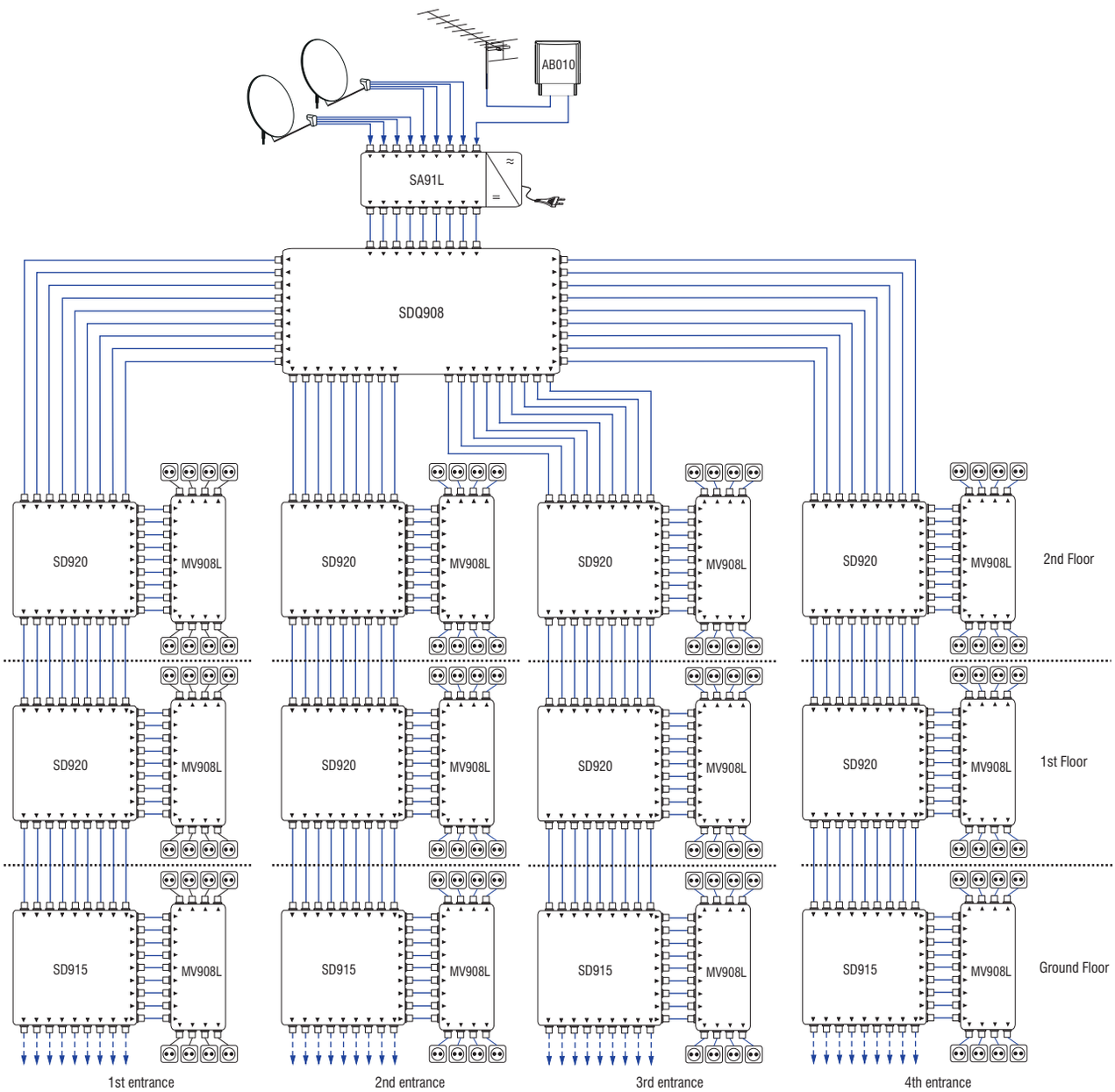

AB010 - UHF masthead amplifier, www.terraelectronics.com
MV908L - 9x8 multiswitch, page 20
SA91L - launch amplifier, page 23
SD915 - 1 way 15 dB tap, page 22
SD920 - 1 way 20 dB tap, page 22
SDQ908 - 4 way splitter, page 22

9 cable system
Application diagrams

Long coridor house installation. Trunk line powered from SA91L.
Upper coridor line powered from SA91L. Lower coridor line powered from MR916L.

MV912L - 9x12 multiswitch, **page 20**
MV916L - 9x16 multiswitch, **page 20**
MR916L - 9x16 multiswitch, **page 18**
SA91L - launch amplifier, **page 23**
SD904 - 2 way splitter, **page 22**
SD910 - 1 way 10 dB tap, **page 22**